Reg. No. [ ][ ][ ][ ][ ][ ][ ][ ][ ][ ]

[18CE52]

FIFTH SEMESTER B.Tech EXAMINATION, DECEMBER–2021

DESIGN OF RCC STRUCTURES

Time: 3 Hours **Maximum Marks: 70**

Instructions:
- **i.** Answer **FIVE** full Questions. Question number 1 and 2 are compulsory. Each question carries 14 marks.
- **ii.** Missing data may be suitably assumed.
- **iii.** IS 456 and SP 16 allowed.

1. a. Write brief notes on: **06**

- **i.** Balanced section
- **ii.** Under reinforced section
- **iii.** Over reinforced section

b. What is stress block? Derive from fundamentals the expression for area of stress block $0.36f_{ck}$ and depth of center of compressive force from the extreme fiber in compression $0.42x_u$ **08**

2. a. A singly reinforced concrete beam 250mm width is reinforced with 4 bars of 25mm diameter at an effective depth of 400mm. If M20 grade concrete and Fe415 bars are used, compute ultimate moment of resistance **07**

b. A cantilever RC beam of span 2m is rectangular in cross- section 230mm X 380mm reinforced with 3-16mm diameter bars on tension side. Determine the superimposed loads on beam in addition to its self- weight. Use M20 concrete and Fe415 steel. **07**

3. a. Design the shear reinforcement of the tapered cantilever beam of width b = 300 mm using M 20 and Fe 415 at section 1-1. **07**

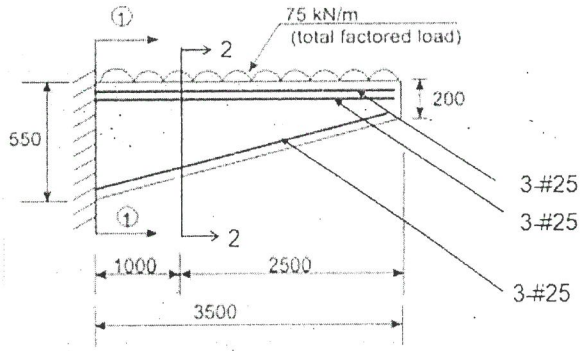

b. Design the shear reinforcement of the tapered cantilever beam at section 2-2. **07**

OR

4. Check the adequacy of the anchorage provided for the longitudinal bars in the cantilever beams shown in fig. 4 and appropriate modifications, if required. The beam is subjected to a uniformly distributed factored load of 100kN (total including self-weight). Assume M20 concrete and Fe415 steel, deformed bars. **14**

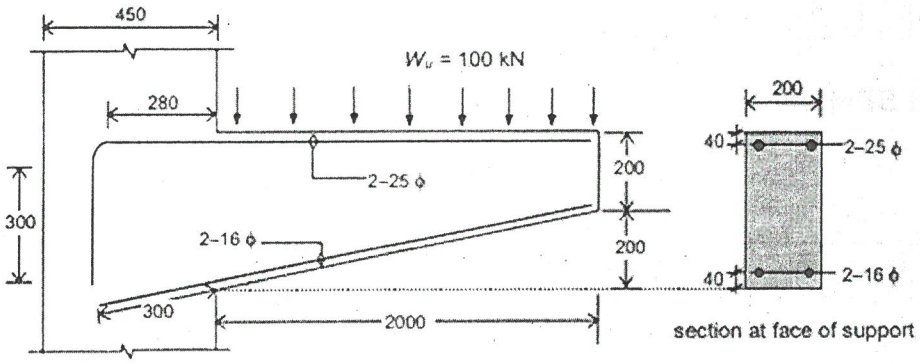

Fig. 4

5.	**a.**	Determine the reinforcement required for a rectangular column 300X 500mm subjected to a uniaxial bending moment factored. Bending moment is 100kN-m and factored axial load is 2000kN.	**06**
	b.	Design a circular column of diameter 400mm subjected to a load of 1000kN and moment 100kN-m. Use M25 and Fe415. Also design Helical reinforcement.	**08**

OR

6.	**a.**	Design a circular column to carry an axial load of 1500kN using lateral ties. The unsupported length of column is 3.3m. Check for slenderness of column and minimum eccentricity.	**07**
	b.	Design a rectangular column 5m long, restrained in position and direction at both the ends to carry an axial load of 1200kN. Check for slenderness of column and minimum eccentricity.	**07**
7.		A rectangular column 450mmX600mm carries a dead load of 800kN and a live load of 1400kN. The SBC of soil is 150kN/m^2. Use M20 concrete and Fe415 steel. Design a rectangular footing. Sketch the details.	**14**

OR

8.		A square column 400mm sides carries a load of 900kN. Design a footing SBC of soil 100kN/m^2. Adopt M20 concrete and Fe415 steel.	**14**